LACELA

Product: Cordless Drill Art. No. D211207

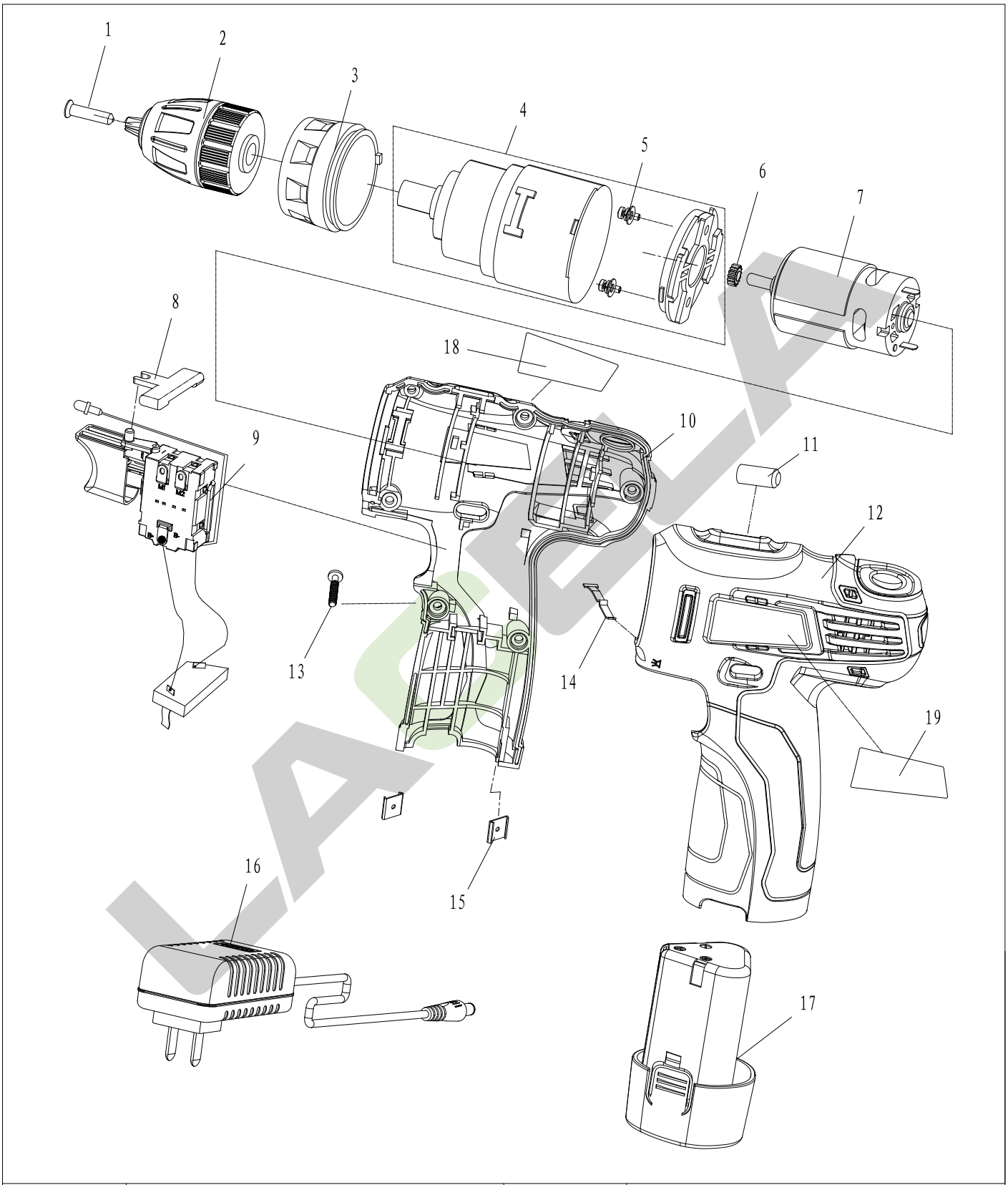

Version No.	D	Enable Time	2022.9

LACELA

Product:Cordless Drill Art.No.D211207

No.	Part Name(Chinese)	Part Name(English)	Code	Qty	No.	Part Name(Chinese)	Part Name(English)	Code	Qty
1	螺钉M5×20-LH	Screw M5×20-LH	30201073	1					
2	钻夹头	Chuck	10304001063	1					
3	扭力杯	Torque Adjusting Ring	10101011160	1					
4	变速箱组件	Gear Box Complete	10701015031	1					
5	带平弹垫螺钉M3×6	Screw M3×6	30201163	2					
6	电机齿轮	Motor Gear	10302004166	1					
7	电机	Motor	10608002009	1					
8	换向推杆	Reversing Push Rod	10101007140	1					
9	开关组件	Switch Assembly	10608002010	1					
10	右机壳	Left Housing	10101002136	1					
11	水泡	Level	10101011161	1					
12	左机壳	Right Housing	10101002135	1					
13	自攻螺钉ST3×14	Screw ST3×14	30202097	6					
14	T型弹片	T-Shrapnel	10401003046	1					
15	尾卡	Buckle	10401008038	2					
16	CD1210充电器	Charger CD1210	56102009	1					
17	LD1215B电池包	Bettery LD1215B	56101095	2					
18	铭牌	Name Plate	20302007333	1					
19	商标	Trademark	20402007079	1					
Version No.		D			Enable Time		2022.9		

LACELA